1860 Army

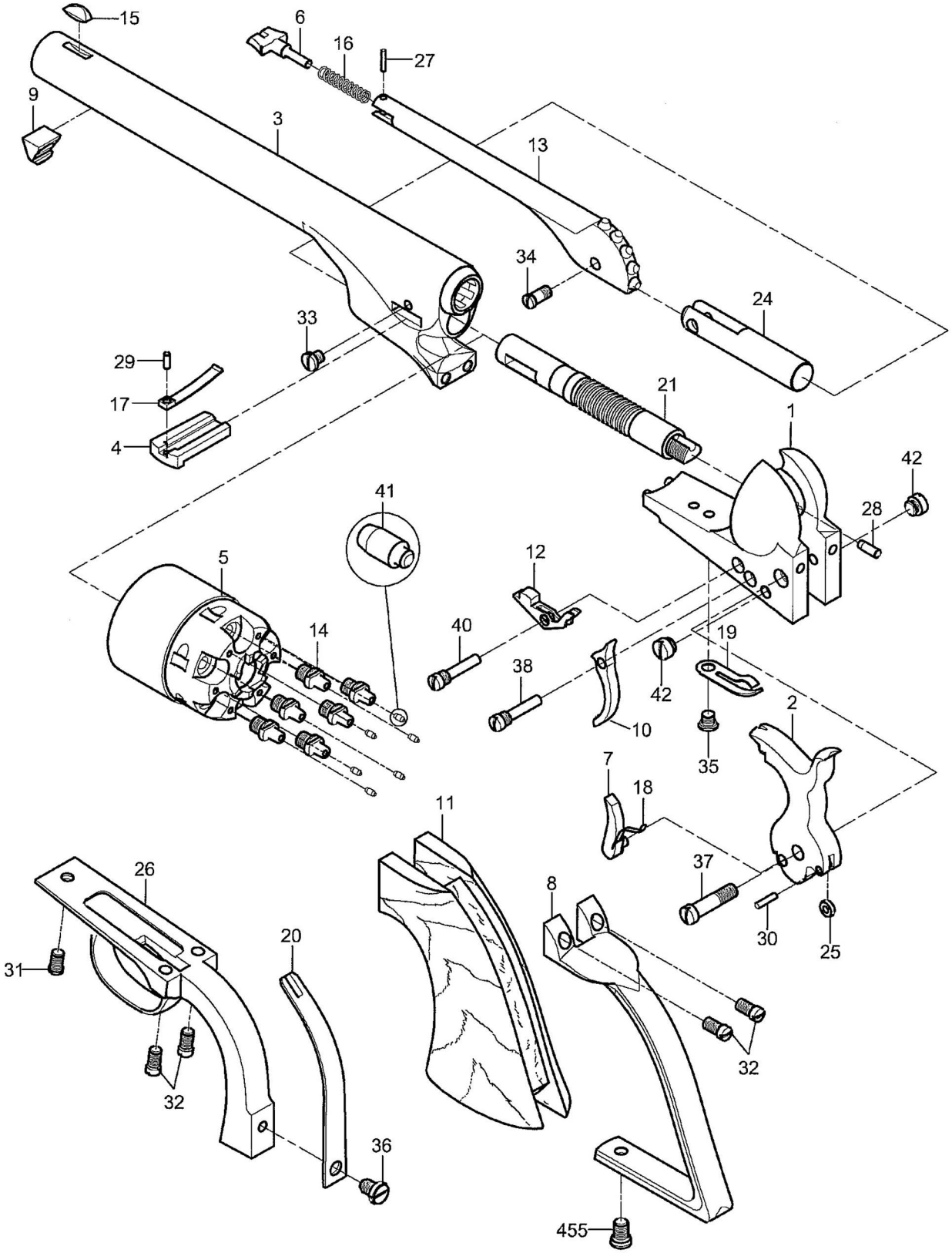

A. Uberti
History Repeats Itself