1871 Richards-Mason Army

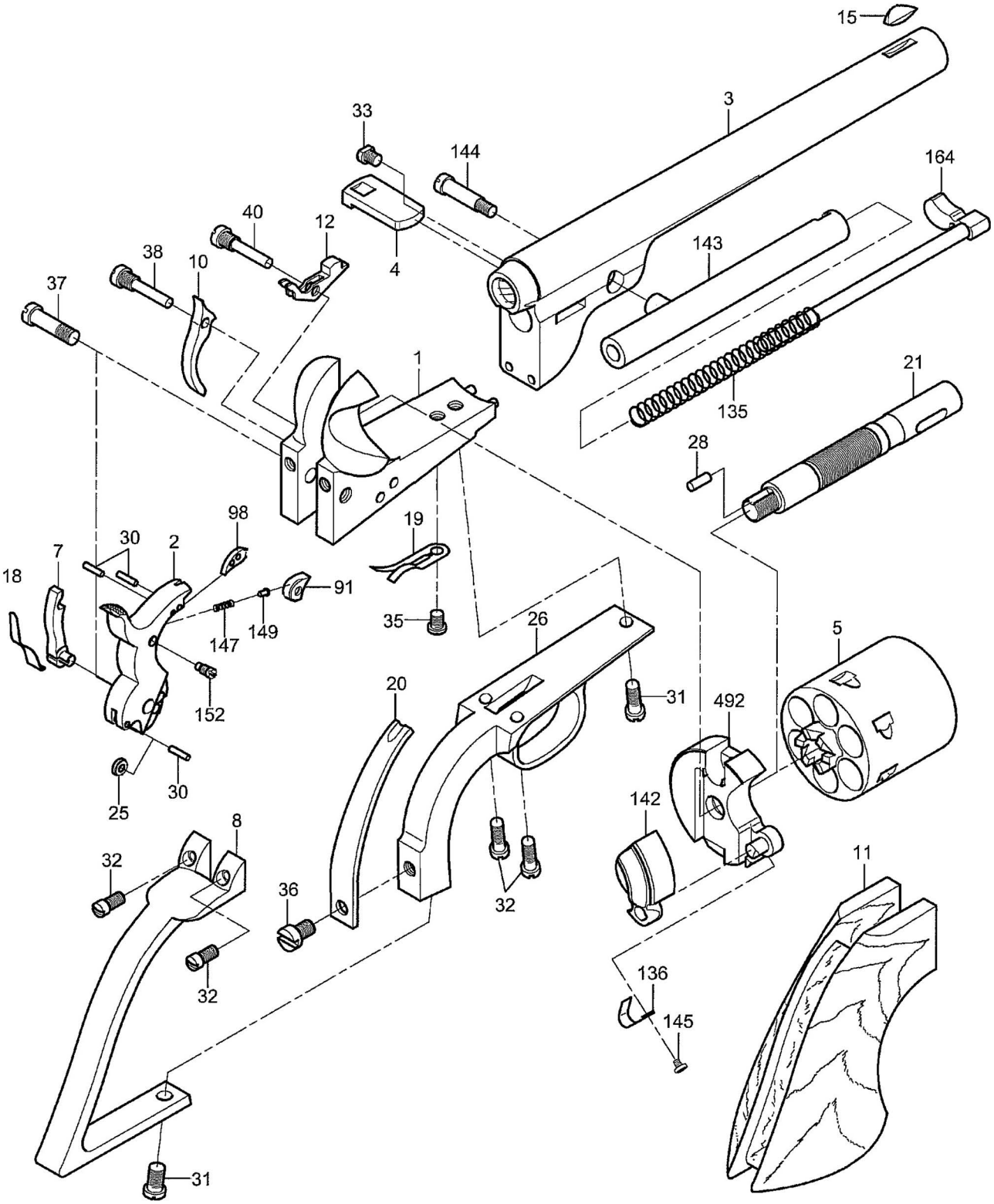

A. Uberti
History Repeats Itself