1872 Open Top

Late Model

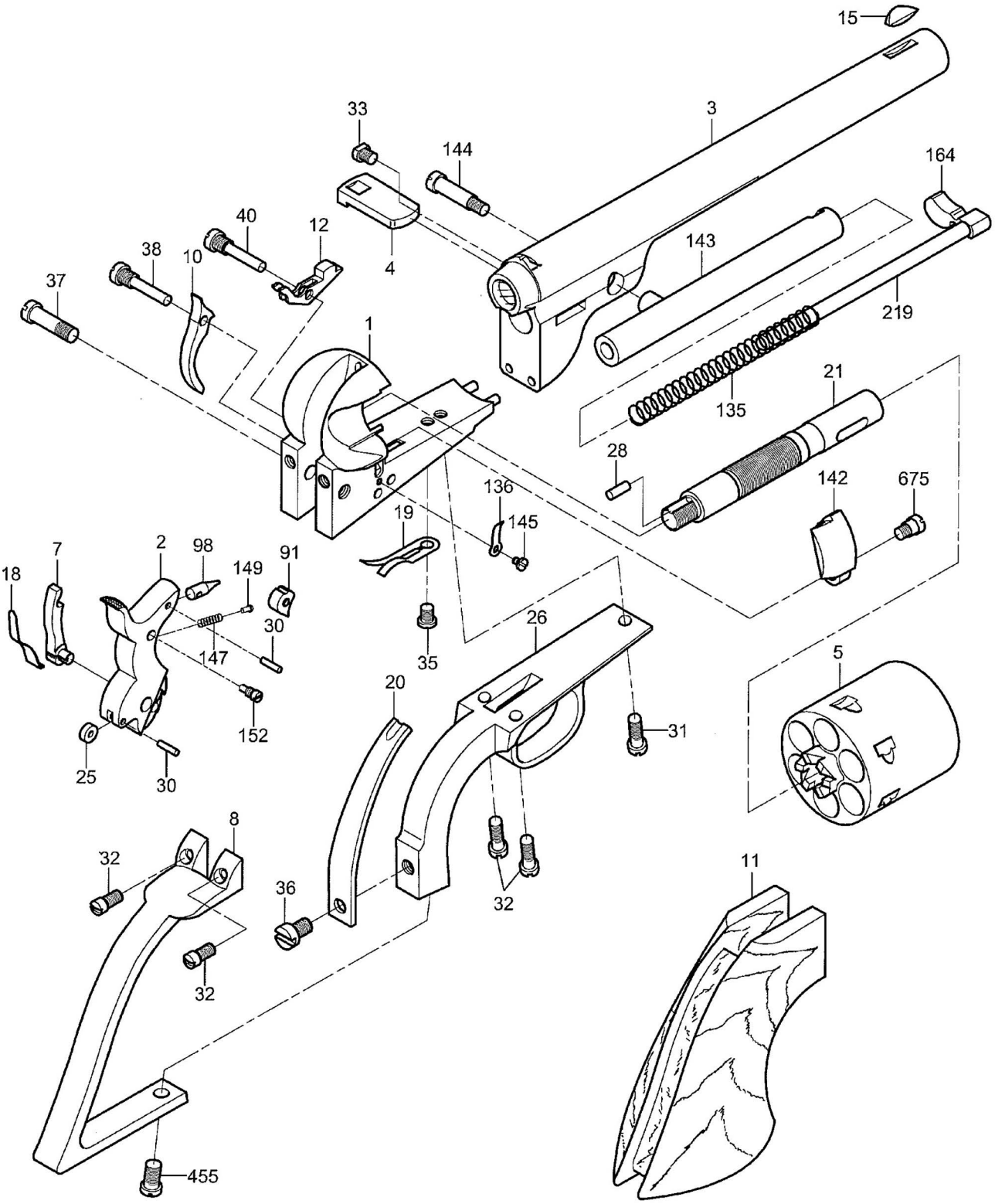

A. Uberti
History Repeats Itself