1875 Schofield 2nd Model

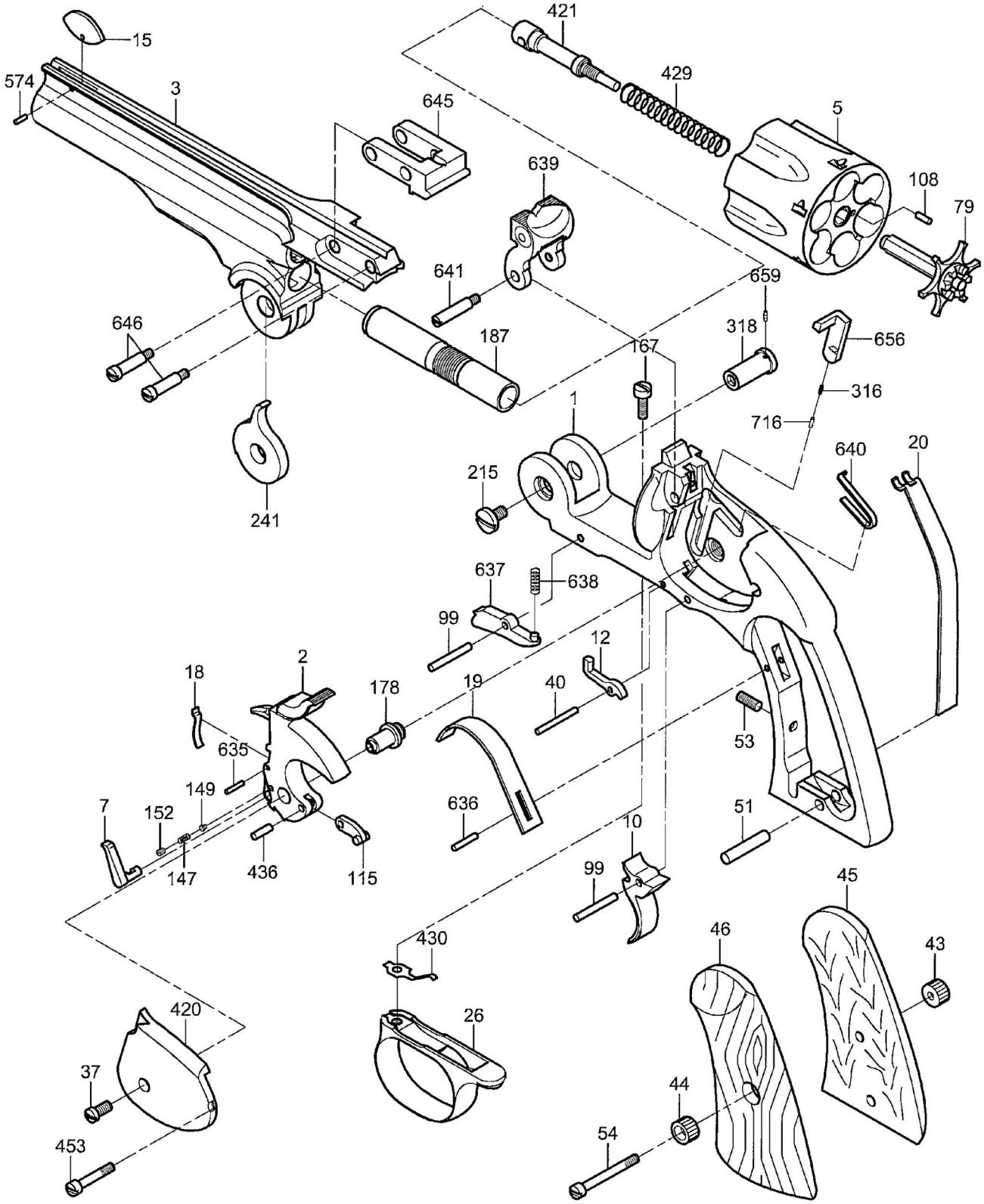

A. Uberti
History Repeats Itself