1873 Cattleman Bisley

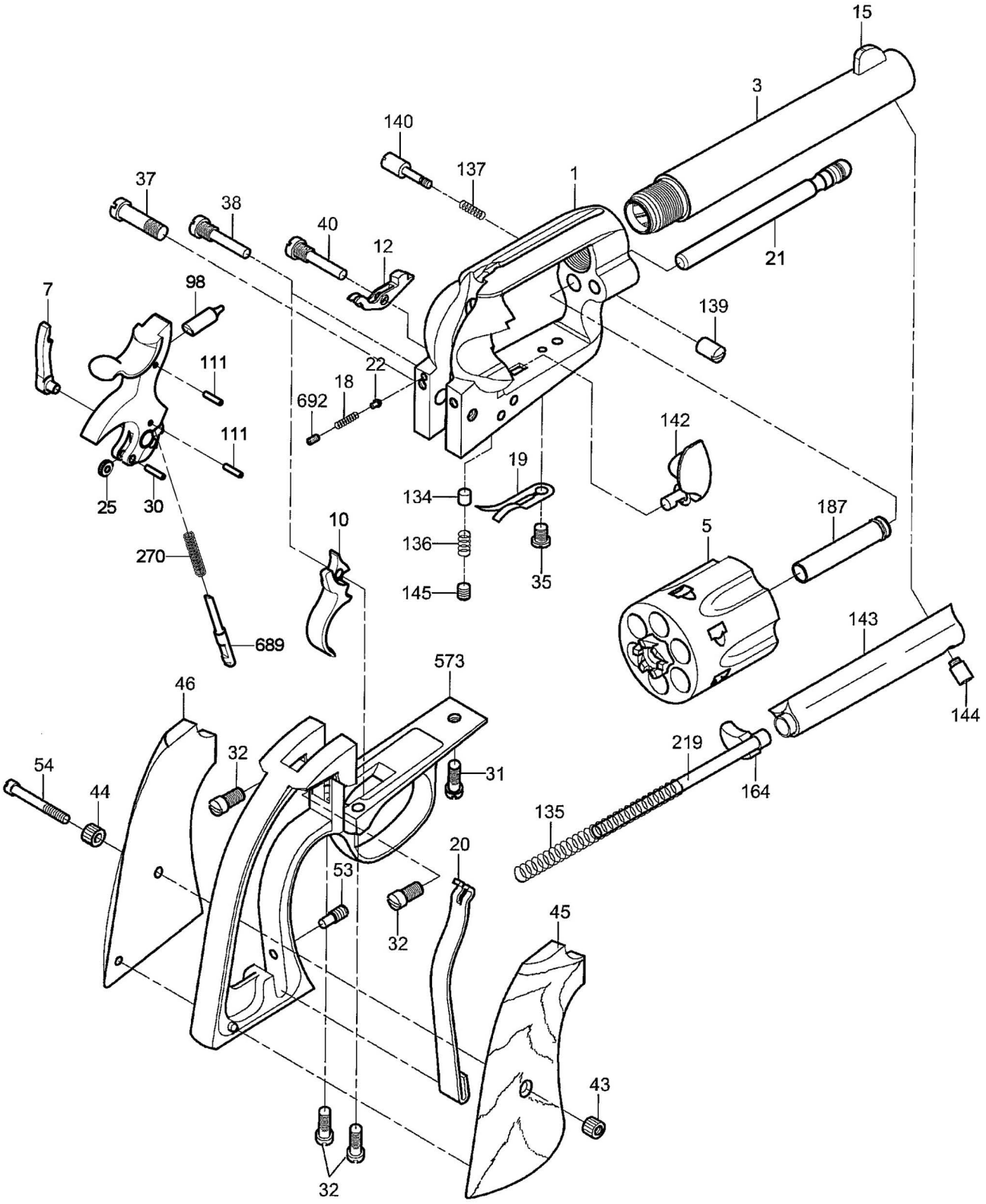

A. Uberti
History Repeats Itself