New Model 3 Frontier

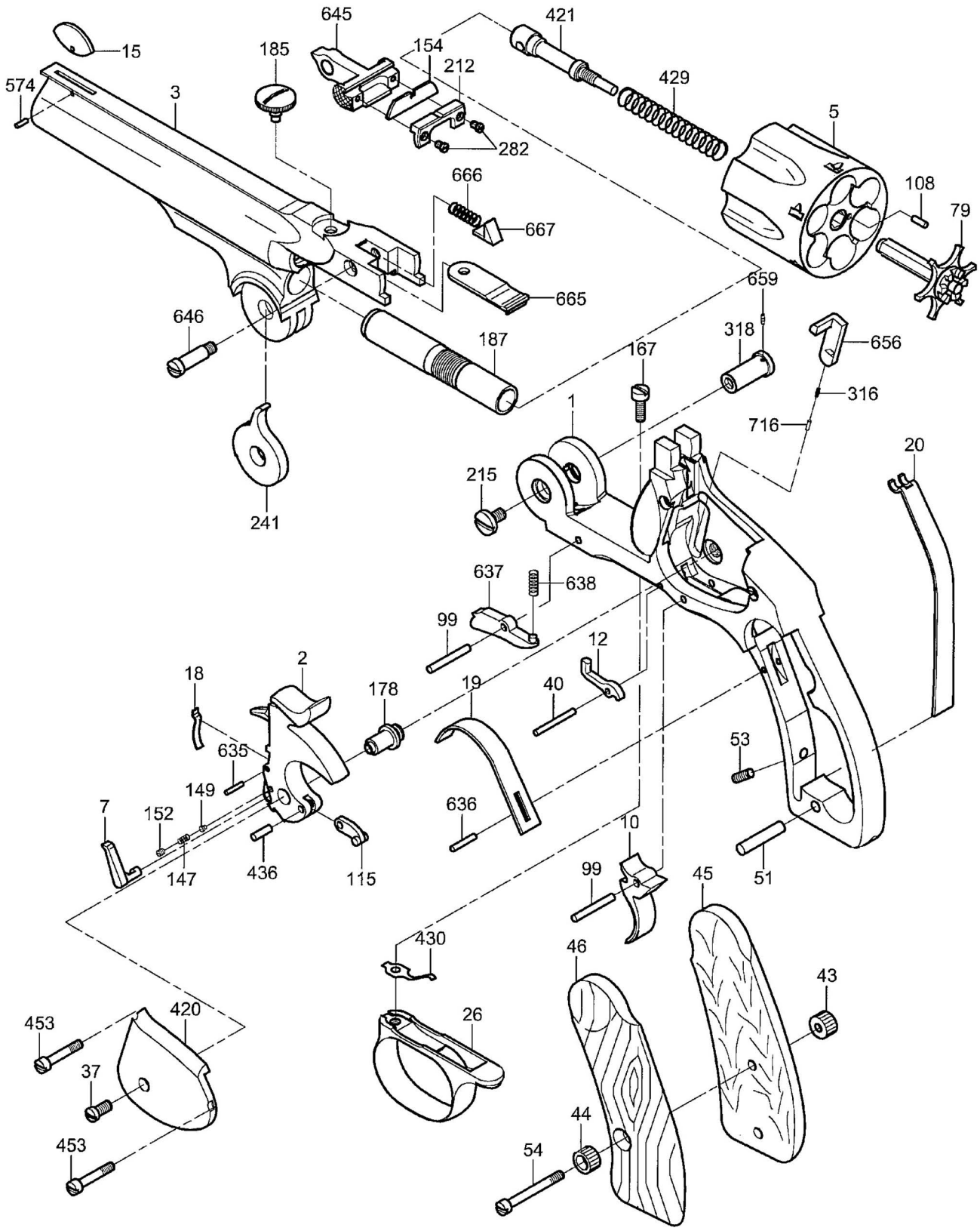

A. Uberti
History Repeats Itself