Russian 3rd Model

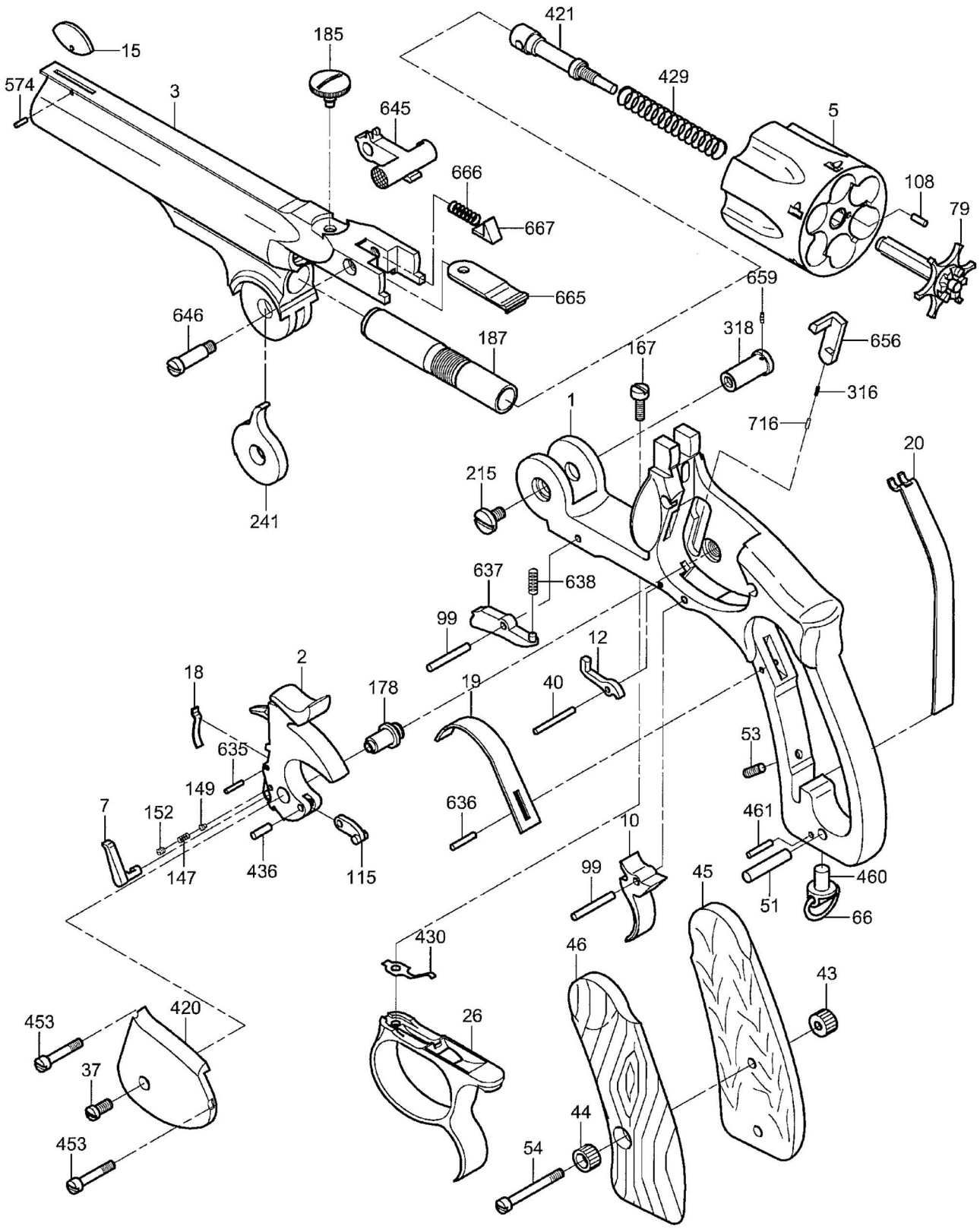

A. Uberti
History Repeats Itself