1873 Rifle

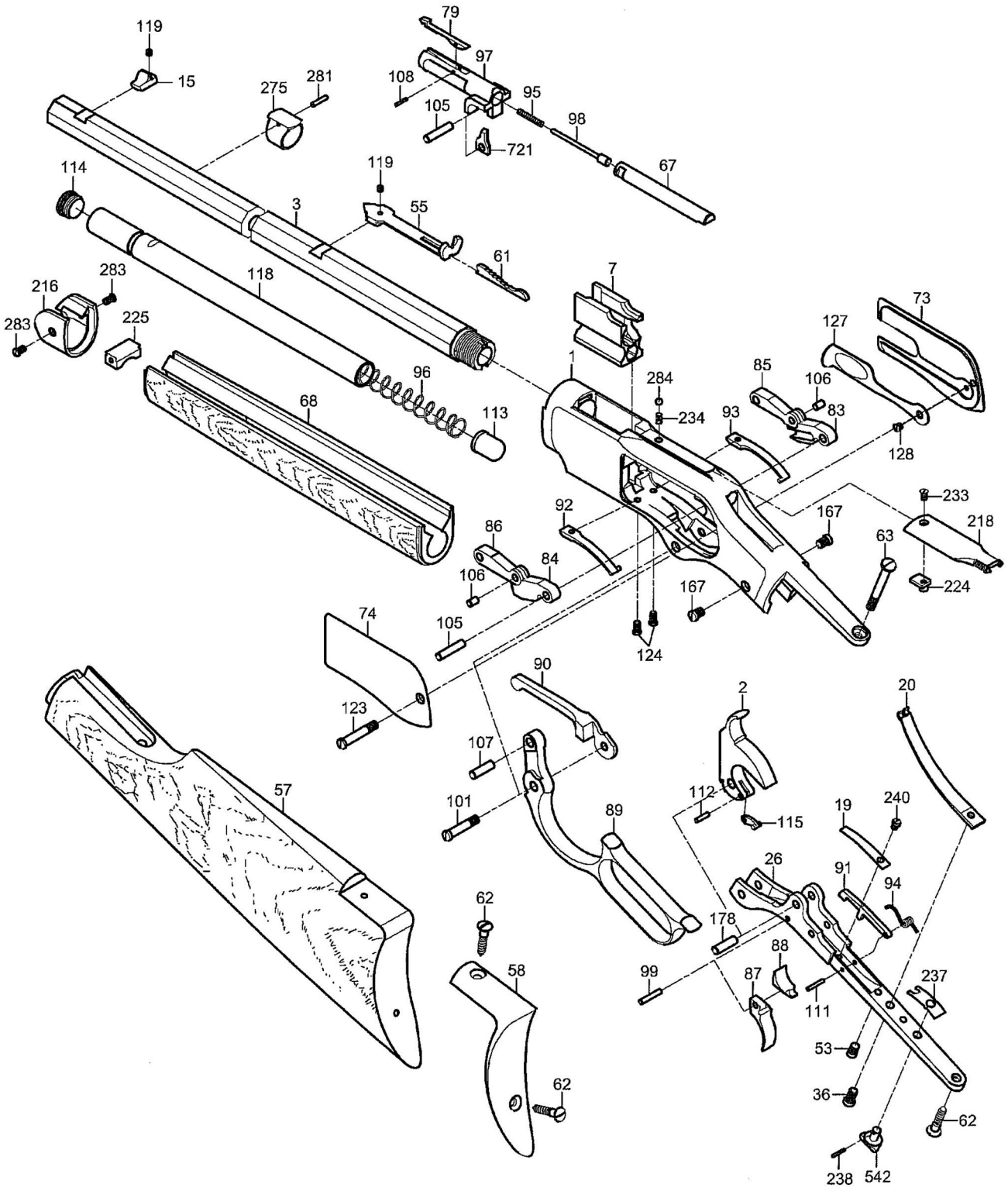

A. Uberti
History Repeats Itself