1883 Burgess Rifle

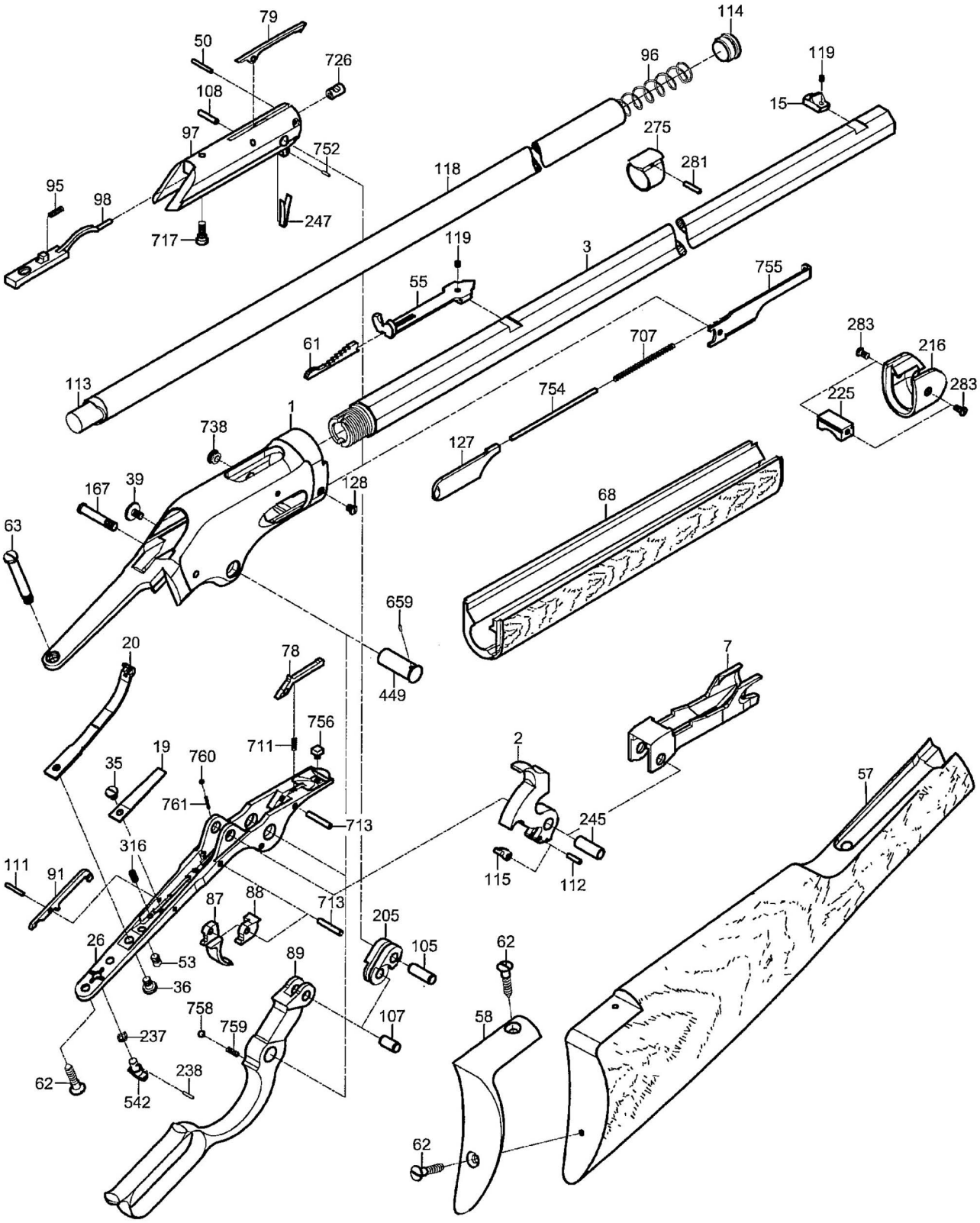

A. Uberti
History Repeats Itself