1884 Lightning Rifle

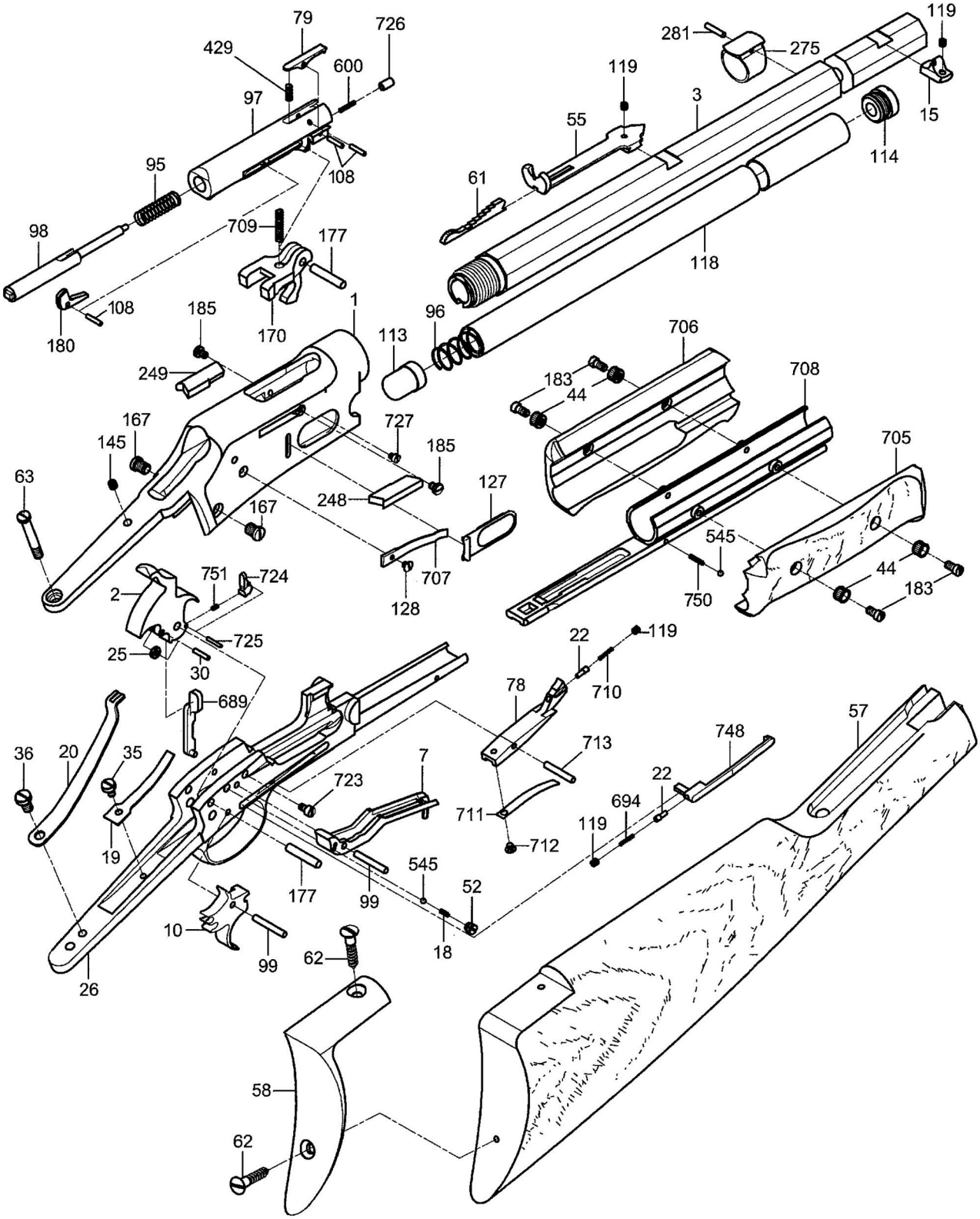

A. Uberti
History Repeats Itself