1885 Single Shot

"High Wall" Rifle

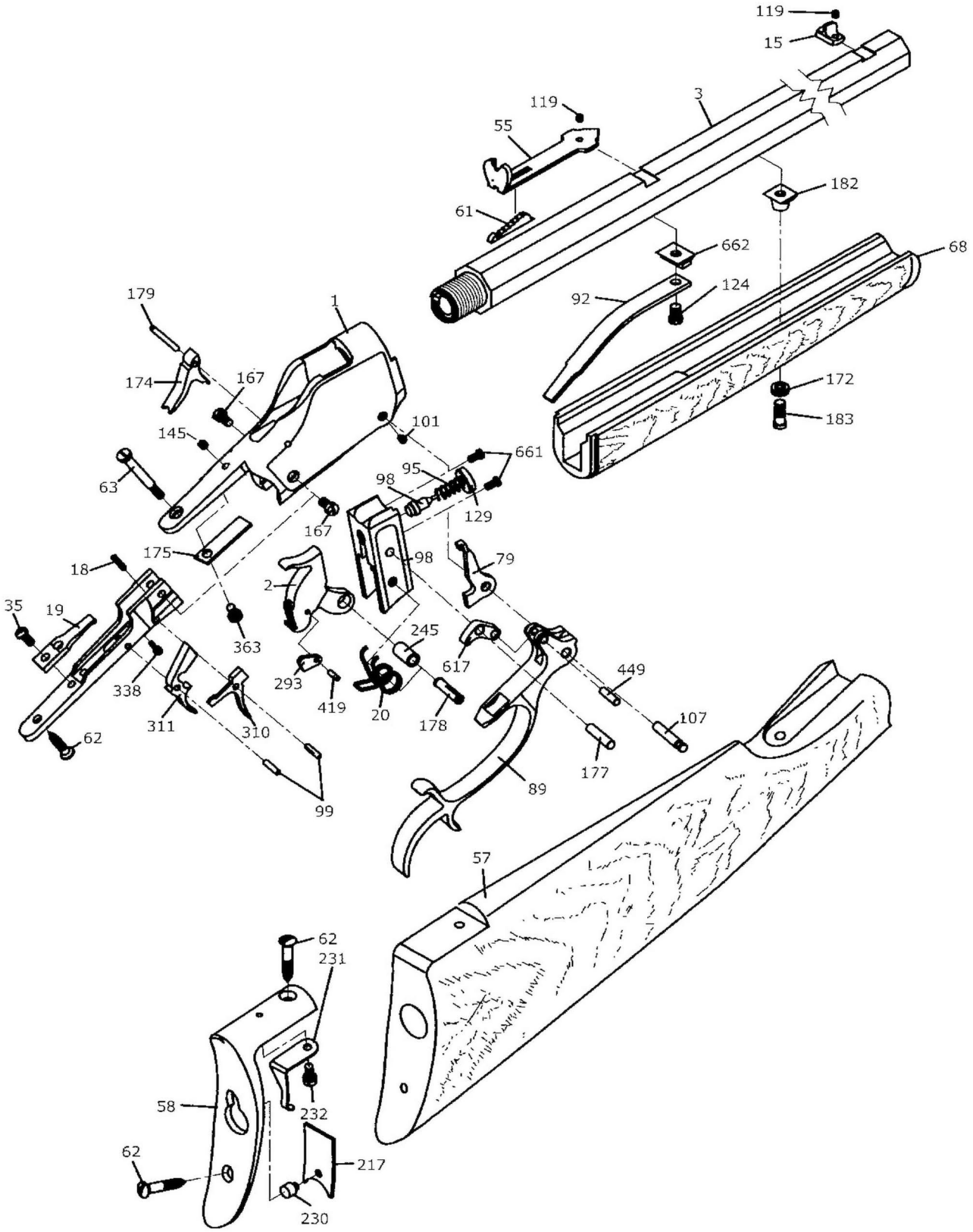

A. Uberti
History Repeats Itself